# CUSTOMER MISCELLANEOUS EQUIPMENT SERVICE
# CIVIL AIR DEFENSE WARNING SYSTEM
# BELL AND LIGHT SIGNAL - PUBLIC ALARM SIGNAL CONTROL

CONTENTS PAGE

1. GENERAL . . . . . 1
2. DESCRIPTION AND OPERATION . . . . . 1 - 2
3. SERVICE ORDERS . . . . . 2 - 3
4. ASSIGNMENT . . . . . 3 - 4
5. CENTRAL OFFICE . . . . . 4 - 5
6. PLANT SERVICE CENTER . . . . . 5 - 6
EXHIBITS . . . . . 6 - 11

## 1. GENERAL

**1.01** This Section is reissued to redesignate the CARW, Civil Air Raid Warning System to CADW, Civil Air Defense Warning System. Also changed in this issue is the customers point of contact for reporting trouble.

**1.02** The CADW, Civil Air Defense Warning System consists of a group of (BL), bell and light stations and (BS), public alarm signals, which disseminate alert and alarm signals to important buildings and locations. Such signals are under control of a keypoint or one or more alternate keypoint stations.

**1.03** CADW alerts, originate in the ADCC, (Air Defense Control Centers) which are operated by the U.S. Air Force. Personnel of ADCC, transmitting over a private line network alert the personnel at keypoint civilian air raid warning stations which are sponsored by the OCDM, (Office of Civil Defense and Mobilization), and usually are manned by local civilians. From these civilian keypoints, alerts and alarms may be sent out over the CADW network to sub keypoints and to the several BL and BS stations in a city, county or larger geographical area.

**1.04** Reference in this section to "Station" shall be considered to be the line termination and equipment located on the customer's premises whereas "Station Line Circuit" is the line circuit termination on the Central Office CADW equipment.

## 2. DESCRIPTION AND OPERATION

**2.01** In each central office of an exchange where there is customer demand for BL and BS service, terminal equipment will be installed. Such equipment will usually be mounted entirely within a single bay and will consist of:

**2.0101** Individual line circuits for BL stations.

**2.0102** Individual line circuits for BS stations.

**2.0103** Common equipment to furnish power supply, alarms and signal controls.

**2.0104** Test and talking facilities.

**2.0105** Repeaters for receiving and sending signals to other central offices and repeaters for receiving control station dial pulses.

**2.02** The wire facilities that interconnect a keypoint with alternate keypoint stations in a given area are known as the backbone network. Such a network may be interconnected to the backbone network of other areas using special intercity DC signal facilities.

**2.03** Referring to the sketch of a typical CADW backbone network, SEATTLE, WASHINGTON, it will be noted that a KEYPOINT (control) station is shown connected to the PARKWAY Central Office. The station equipment consists of a simple dial and mounting case. The dial has only five finger holes which are designated: STOP, TEST, ALERT, TAKE COVER, LISTEN TO RADIO. Also, at this station there is a BL station set which is a small case containing a ringer and four cold cathode tubes with lenses numbered 1, 2, 3, 4.

**2.04** Assuming that personnel at the control station receives information via the ADCC of such content as to justify alerting the surrounding country of a probable air attack, the attendant would unlock the cover protecting the dial and dial "ALERT" twice. This would pulse the one-way receiving equipment in PARKWAY office which in turn would repeat the pulses to all other repeaters connected in the backbone network, as well as repeaters in other cities which are connected to the backbone network.

This material is prepared for Pacific Northwest Bell Tel. Co. purposes and is in no sense a publication. Neither the material nor any portion thereof is to be reproduced in any form by others without the written permission of the Pacific Northwest Bell Tel. Co.

480-210-200
iss. 3
NOV. 67

The repeaters so pulsed would in turn cause each associated receiving and distributing unit to energize and send out the 2 (ALERT) code to all BL stations. At all such stations the No. 2 light and associated bell would operate on a cycle of .5 seconds off, .5 seconds on, 2.5 seconds off, and continue to repeat this code until the attendant at the control station or alternate control station dials STOP. If an air attack were imminent, the control station would dial TAKE COVER - TAKE COVER (each code except STOP must be dialed twice) and the function would be the same except that in addition to the BL station operation, equipment in the central offices would be energized that would operate all public alarm signals that are connected to the system (siren, horns, etc.). The code in this case would be a warble effect by virtue of a continuous code of .5 seconds on, .5 seconds off, etc. The Control station may change any code to another one by dialing STOP followed by dialing the code of the signal wanted. A bell and light set located near the control dial will provide the attendant with a verification of the signals being sent to all stations.

**2.05** Code used on backbone network~~s of six or more stations (1 to 200 size)~~:

| | |
|---|---|
| TEST-TEST | - 2 Bell Code on BL stations only. |
| ALERT-ALERT | - 3 Bell Code on BL stations. 3 to 5 minute sirens on BS stations. |
| TAKE COVER TAKE COVER | - Continuous short bells on BL stations - warbling sirens on B.S. stations. |
| LISTEN TO RADIO LISTEN TO RADIO | - Long ring on BL stations only. |
| STOP | - All signals stopped, also dialed before changing from one code to another. |

**2.06** Code used on systems of 1 to 5 stations (BL service only).

| | |
|---|---|
| TEST | - Continuous Ring Signal |
| ALERT | - Continuous Ring Signal |
| TAKE COVER | - Continuous Ring Signal |
| LISTEN TO RADIO | - Continuous Ring Signal |

**2.07** Two sizes of central office receiving and distributing units may be provided. The 1 to 5 station unit is designed to take care of small towns. This unit requires two pairs of wires to each station. Regular ringing current is used to operate the station equipment (See 2.06). Test jacks and test equipment are not provided; therefore, testing will be done on M.D.F. shoes in the regular way.

**2.08** The large size CADW with an initial unit of 50 lines may be added to - in units of 50 up to a maximum of 200 lines. Any number of the 50 and/or 200 units may be interconnected in the same backbone network using combinations of several types of repeaters. Lines of the basic unit (1 to 50) may be arranged, by a wiring change, to prevent some signals from reaching stations restricted. Take Cover and Listen to Radio Signals cannot be restricted from any stations.

**2.09** Public alarm signal line circuits (BS) associated with each receiving and distributing unit may be provided in each central office in any quantity up to a maximum of 30. These line circuits energize when an Alert or Take Cover signal is dialed by the control station attendant. Telephone Company will provide regular standard 20 cycle subscriber equipment on these loops and existing practices and limitations pertinent to such equipment shall apply. For example, if a customer prefers to manually operate and control his siren or whistle equipment, we might furnish only a regular ringer and 21B type visual signal. On the other hand, if customer wants his siren, whistle or horn to be under control of the control station attendant, we would furnish a standard outdoor type relay set (KS-7341) which, when energized would in turn operate the customer's equipment. The central office line circuit equipment has been provided with optional wiring to vary the length of the ON-OFF period of 20-cycle current applied to lines in order to compensate for customer-owned large motors that require longer time intervals to attain full speed. The Telephone Company will furnish only one station relay set per line.

**2.10** Signal grade loop facilities interconnecting repeaters of the several offices in a backbone network, and the control station loop shall not exceed 1500 ohms each. Ordinarily such facilities will be authorized and assigned on an P.L.S.O. order by the Toll Service Supervisor. Existing practices and procedures on P.L.S.O. orders shall apply.

**2.11** See BSP 480 series for the installation and maintenance of CADW station equipment.

## 3. SERVICE ORDERS

**3.01** Intraexchange (exchange network) and interexchange (special channels between cities) facilities will be authorized by P.L.S.O. and/or circuit orders. Control and alternate control dial stations will be authorized by a regular exchange service order. Facilities for initial as well as subsequent additions or change of location of such

stations will be covered by P.L.S.O. and/or circuit orders. Facility numbering, designation, lineup, precautions and work operations will be in accordance with existing sections pertaining to private line and leased circuit services.

**3.02** Subscriber services, including control and alternate control stations mentioned in 3.01, and including any company monitoring stations (except the BL set included by the Chief Engineer on each central office CADW test panel) will be authorized by a regular service order prepared and issued in the same manner as other private line telephone service except that mileage data will not be recorded because the established rate includes mileage, if required. Assignment of the basic station number, BL or BS service, will be made by Marketing and entered on the service order before release to Plant. The prefix will be BL followed by a four-digit number. This number followed by the abbreviated city, name and prefix of the office in which the serving CADW equipment is located shall be entered in the "Station No." section of Instruction Card, Form GP-253. A station located in Seattle served from the Main office would, for example, have a number such as BL-3220 SEA. MA. To take this number apart the letters BL are assigned to both Bell and Light (BL) and Bell and Siren (BS) installations even though they are separate types of service. The four digits, in this case 3220, are selected from one of two groups of numbers 0001 to 4999 for commercial and state or local government services and 8000 to 8999 for Federal Government. The SEA. MA. is added to enable Repair forces, when they receive a trouble report from a station, to quickly determine which central office to contact for tests. Interexchange services (station located in one exchange served from CADW equipment located in another) will have the digit 4 preceding the BL prefix, i.e., 4BL-3220, SEA. MA.

**3.03** Channels from station equipment to the closest central office receiving and distributing unit will be provided in all cases without separate entry on service orders. Service order abbreviations and definitions applicable to BL-BS service are found in the USOC, (Uniform Service Order Codes) book.

**3.0301** All service orders for BL or BS will show an asterisk in the AC space and on an "R" line the name of party on customer's premises who is authorized to direct placement of equipment. Also on an "R" line the service order will be shown the telephone number closest to the proposed location of BL, Dial, or BS station set.

## 4. ASSIGNMENT

**4.01** A Form E-4052 record shall be prepared for each central office having a CADW receiving and distributing unit. A separate Form E-4052 shall be prepared for each such office that is equipped with one or more BS line circuits. All line circuits should be listed in numerical sequence on the record. The station number of all working BL or BS line circuits shall be entered in the appropriate spaces of Form E-4052. Optional wiring data shall also be shown on such record in order that service orders may be assigned to provide proper restriction (see Paragraph 2.08) and timing (see Paragraph 2.09) wire options. Other information such as loop limits, designations of each wire on 4-wire stations (small office units) etc., useful to assignment work shall be entered on the record in the usual manner. The following notice shall also be placed on each BL and BS record sheet. WHEN LAST WORKING STATION IS DISCONNECTED, IMMEDIATELY PREPARE A REQUEST TO DISCONNECT C.O. EQUIPMENT PER M24.52.1.

**4.02** In assigning the station line circuit, select it from the record (see Paragraph 4.01) to keep the load on odd and even numbered circuits, equal or plus one. This would ordinarily come about if assignment were made in rotation starting with BL or BS line circuit 1 and 2-3-4, etc., for subsequent orders. However, if an extension station is placed on a line, it should be posted to the record and counted when computing the number of stations on odd and even line circuits. Number cards shall be prepared and attached to the IW copy of work orders.

Form GP-249 - Dial code plate for control station.

Form GP-250 - Instruction Card for control station.

Form GP-251 - (Number Strip 1-4) for all BL receiving stations.

Form GP-252 - (Code Designation Card) for all BL receiving stations.

Form GP-253 - (Instruction Card) for all BL receiving stations.

Form GP-253 - Or P-2241 with GP4W card holder may be used at all BS stations to identify station and provide trouble reporting information.

**4.0201** The appropriate local repair service number will be printed by assignment forces on GP Forms in the space: to report trouble, call repair service: _____

**4.03** On the service order enter control office telephone number; this would be the switch room telephone number of the office containing the receiving and distributing unit. This telephone number is required by the installers and repairmen to test the station equipment.

**4.04** Check RMKS to make sure the subscriber call number per 3.03 is listed. If not, P-102 to Marketing for required information. This number must be posted on records (See Sections 5 and 6).

**4.05** Assign facilities in the regular manner consistent with loop limitations. In the LINE space enter the line circuit number and wiring options required to provide restricted signals as specified on the order.

**4.06** All BL and BS facilities are classified as SPECIAL SERVICE LINES and will be treated in accordance with practices applying to such service.

**4.07** Plant service center forces will prepare delayed order report, P-102, immediately upon receipt of a CADW service order under the following conditions:

**4.0701** The first service order for BL or BS station service in a central office serving area shall be treated as follows:

Prepare P-102 to show facility make-up from central office to the station location, i.e., gauge and length of cable sections, type and length of open wire, approximate length of drop wire. If the P-102 is related to a control or alternate control station, also include information regarding work required to remove terminal bridges. The P-102 shall be forwarded to the supervising toll wire chief or district plant manager as appropriate who will immediately notify the toll service supervisor and also to the district plant engineer if outside plant facilities or removal of terminal bridging is required. This notification is required to start the rearrangement of toll facilities via circuit orders and/or P.L.S.O. orders which, when completed will bring the new central office serving area into the CADW network.

**4.0702** Subsequent service orders for BL and/or BS stations (received after the first order) will be P-102'd only when Outside Plant facilities are not available or available facilities exceed resistance limits. P-102's should be processed in the same manner as other exchange service.

**4.08** Control or alternate control dial stations shall be served by facilities that are clear of bridged terminals. The terminal from which the drop or inside wire feeds shall be given SSM treatment.

**4.09** CADW service orders after assignment and station number cards are prepared, will be distributed and processed in the same manner as other exchange service orders.

## 5. CENTRAL OFFICE

**5.01** A jumper shall be run from cable pair to proper line circuit as specified on the frame copy of the service order. Lugs and jumpers will be given special service line treatment after which the service order will be initialed and passed to the chief switchman or equivalent supervisor.

**5.02** The chief switchman will arrange for restriction or timing wire changes, designations for bridging jacks to show line number, posting of record on the test panel to show line number, customer's name, wiring option used, customer's telephone number (see 3.0301) date, time and initials of craftsman doing this work. The work order will then be initialed and returned to the craftsman to route in the usual manner.

**5.03** When a call is received from a field craftsman on the regular switch room telephone asking for a test on a BL station, the central office craftsman will ask him for the telephone number of the station located within viewing distance of the BL station. Central office craftsman will then proceed to the CADW bay and using the telephone on that bay, call the field craftsman. Central office craftsman will then verify the receiving station (BL or BS) number, customer's name and telephone number, with the field craftsman. Central office craftsman will then plug the test cord of the test panel into the proper line bridging jack, will operate 1, 2, 3 or 4 test keys in accordance with the type of signal to be tested and will then press the nonlocking TEST key and check with the field craftsman as he does so, to verify that the proper lamp lights and station bell rings as long as the TEST key is depressed. Central office craftsman will continue to test with the field craftsman until station equipment operates properly. Field craftsman will then enter central office craftsman's name on the work order or repair order and call the service order desk or test desk to report completion of the service order or repair order.

(LOCAL TESTS)

**5.04** Civil defense people may periodically make system wide tests to determine that all BL and BS signals operate properly. To supplement such tests or as a result of such tests, Telephone Company initiated routine of station receiving equipment may be authorized by the District Plant Manager. To make such routine tests the central office craftsman using the call line on the CADW bay will call the telephone number listed as nearest to a given station receiving set and inform the party who answers that a test of BL signals is to be made. Also ask the party who answers to inform others that may be within sight or hearing of the receiving station to not be alarmed. Then using the test cord in the proper station bridging jack, ring each signal and check results with the customer. If all signals are received by the customer, thank him for his cooperation and inform him that the test is finished and signals received after that will have meaning. Hang up and proceed to the next entry to be tested. If trouble is encountered, report details to the Plant Service Center forces.

TO SUBSCRIBER

PSC

**5.05** No special precautions are necessary when using test panel equipment in connection with station

bridging jacks as in 5.04 but before any work, including equipment cleaning, is done on bay equipment or associated wiring, repeaters or cable pairs associated with repeaters, it will be necessary to call the appropriate toll control or subcontrol office for authorization.

**5.0501** If maintenance tests are deemed necessary on the network circuit from any central office receiving and repeating unit, or the control station, such request must first be made to the toll control office. The toll control office will alert all central office personnel concerned on the network and when satisfied that measures have been taken to prevent any false signals from being transmitted on the network out to BL and BS stations, authorization may be given.

**5.0502** Procedure for "test 9" as covered in the 201 section of the BSP is quoted in part: "There is a provision in the equipment for testing the network on an over-all basis by using 9 as the test digit. When a 9 is transmitted upon the system it will bring the GREEN test digit lamp TST at each central office dial pulse receiving unit. This will give an indication to the operating and maintenance personnel that the system is in working order."

**5.0503** At any time, in the event a false signal such as Alert or Take Cover is known to have been accidentally transmitted over the network to the public signal receiving and siren stations, dial STOP as quickly as possible then immediately following call the toll control office and explain the situation.

**5.0504** Receiving and distributing units may be modified to provide a beehive type guard lamp to advise central office maintenance forces that the circuit has been left in an abnormal condition following a test, that is, the control or subcontrol dial station failed to complete a test cycle (one not ending in STOP). The "wrong digit" or "incomplete cycle" guard alarm can be retired manually by each office but this MUST NOT BE DONE unless such instruction is received from the toll control office. The toll control office upon being advised of an "incomplete cycle" alarm will contact civil defense authorities and verify the intent of the control station, and will urge that equipment be restored to normal by sending a STOP signal from the control or subcontrol dial.

**5.06** The telephone number of the toll control or subcontrol office and appropriate warning information shall be stenciled on the protective covers of every CADW equipment bay.

**5.07** In some cases the toll control office of a network may deem it advisable to have all RCO keys operated and all L1 relays blocked nonoperated on CADW all bays of the network. In this control office to call the switchroom off each central office on the network to arrange for the blocking and ultimate restoral of the CADW equipment.

**5.08** The backbone network facilities are equipped with permanent test features so that shorts, opens or grounds will cause an immediate alarm to sound and the defective section will then need to be removed from the network. The receiving repeaters connected to control or alternate control station dials are equipped to provide an alarm signal when the dial is operated as a call to attention, in order that central office personnel may observe for proper operation of equipment during actual usage.

**5.09** The BL set located on each CADW bay shall be patched to an unassigned line circuit at all times when the test panel is not in use.

## 6. PLANT SERVICE CENTER

**6.01** Card records shall be prepared in accordance with practices pertaining to private line service. PRIVATE LINE NO. will be the BL number shown on the service order. Control or alternate control station equipment shall be entered on the same card as the associated BL receiving station equipment; CONTROL or ALT. CONTROL as appropriate shall be entered on the card above the BL number. Data on the service order such as wiring options, customer's telephone number shall be posted to the card record in addition to regular entries.

**6.02** SSM (Special Safeguarding Measures) practices apply to all BL, BS and SC (intraexchange signal circuits). SC facilities between offices will be authorized by P.L.S.O. and/or circuit order. The record and maintenance of such circuits are the responsibility of the several plant service centers. Each plant service center shall prepare a master card showing the backbone network or that portion thereof in which full or joint responsibility is vested. The master card may be prepared using the legend prescribed on the typical SEATTLE, WASHINGTON layout shown in this section. For handy reference the card should be filed in front of BL and BS line cards. The toll control office shall be notified immediately when trouble develops on any portion of the network.

**6.03** Regular trouble reporting, clearing, and coding practices apply to BL and BS services.

**6.04** Station testing of BL service for the large units (over 5 lines) will be done from the CADW equipment bay (See Part 5).

**6.05** Testing of all BS station relay or signal sets shall be done on regular test desks using M.D.F. test shoes and regular ringing current available on test on test desks. Before applying ringing current to such lines be assured by the field craftsman that

customer-owned or company-owned sirens, horns or whistles are disconnected from the station relay set.

X **6.06** Telephone Company employees will not originate, or permit others to originate warning signals from points other than the control of subcontrol station dial. Persons purporting to have authority to make such requests, regardless of the reason (control station out of order, emergency, etc.) shall be referred to the toll control office. Tests on individual local station or test directed by the toll control office are permitted as specified in this practice. False operation of any station signal (BL or BS) shall be reported in accordance with procedure applicable to PLANT EMERGENCY REPORTS (BSP 002-502-900 PN)

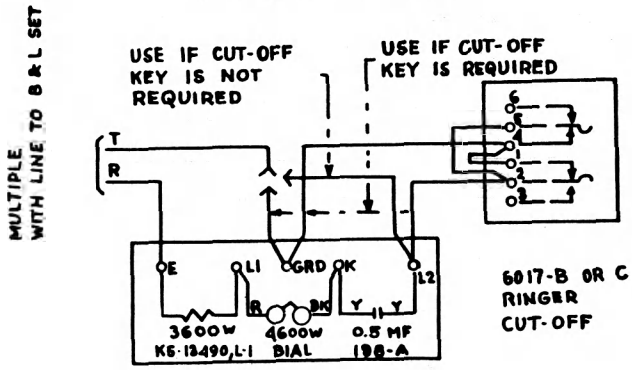


FIG. A
EXTENSION BELL

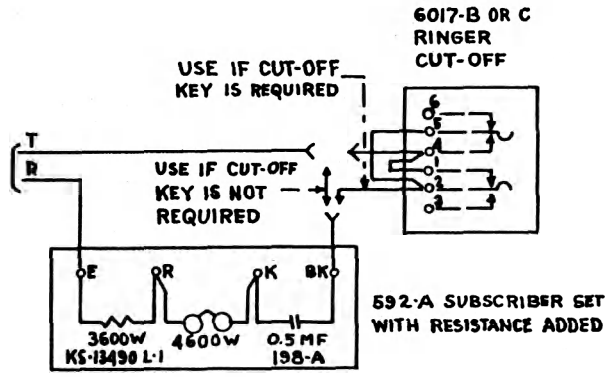


FIG. B
EXTENSION LOUD RINGING BELL

FIG. 4
CONTROL STATION DIAL

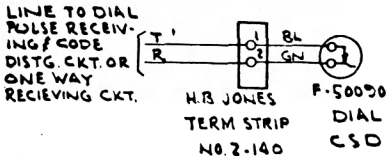

STATION SIGNAL INDICATOR CIRCUIT

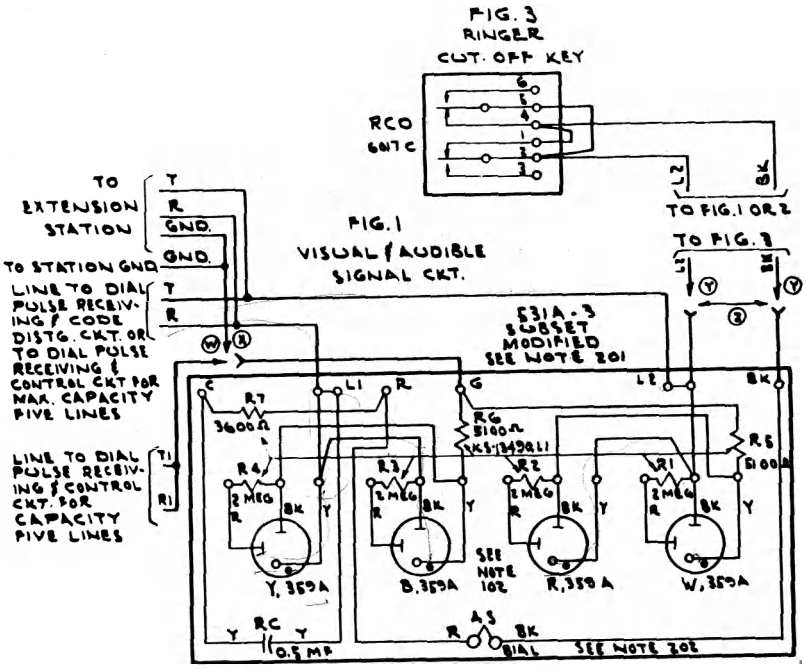


FIG. 2

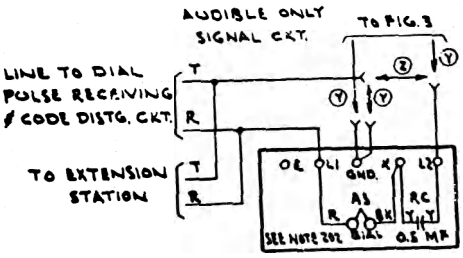


Eqpt. Notes:

201. The 531A-3 subset, Fig. 1, shall be modified in accordance with ED-69231-01.

202. Dial ringers shall be equipped with 2-41B gongs and 101A gong attachments with knockouts removed.

A - One extension BL signal indicator, extension bell (Fig. A), or extension loud ringing bell (Fig. B) may be provided in addition to the main BL set where loop resistance does not exceed limits in Table A.

B - 3600 ohm resistance shall be in series with condenser and ringer in all cases.

C - Cut-off keys to silence the <u>only</u> ringer shall be NON-LOCKING (6017C).

D - Bias springs of <u>all ringers</u> shall be set at <u>minimum tension</u>.

TABLE A

Loop made up in part of open wire or drop wire.

| WITH 15,000 Ω MIN. INS. RES. | | | | | | | |
|---|---|---|---|---|---|---|---|
| LINE TO CONN. CKT. | MIN. VOLTS AC | MIN. VOLTS DC | MAX. EARTH POTENTIAL | MAX. COND. LOOP: NO EXTENSION | ONE EXTENSION INDICATOR * | ONE EXTENSION RINGER | TWO EXTENSION RINGERS * |
| 2-WIRE | 65 | 45V. | 0 | 600 | 50 | 300 | 200 |
| | 70 | 45V. | 0 | 1300 | 400 | 700 | 600 |
| | 70 | 45V. | ±5 | 800 | 150 | 400 | 200 |
| | 70 | 45V. | ±10 | 300 | | | |
| | 75 | 45V. | 0 | 1800 | 800 | 1200 | 1000 |
| | 75 | 45V. | ±5 | 1300 | 400 | 800 | 600 |
| | 75 | 45V. | ±10 | 900 | 200 | 400 | 300 |
| | 80 | 45V. | ±10 | 1300 | 400 | 900 | 700 |
| 4-WIRE | 65 | 45V. | | 500 | | 200 | 100 |
| | 70 | 45V. | | 1000 | 200 | 500 | 400 |
| | 75 | 45V. | | 1500 | 600 | 1000 | 900 |

TABLE B

Entire loop in cable and inside wire

| WITH 50,000 Ω MIN. INS. RES. | | | | | | | |
|---|---|---|---|---|---|---|---|
| LINE TO CONN. CKT. | MIN. VOLTS AC | MIN. VOLTS DC | MAX. EARTH POTENTIAL | MAX. COND. LOOP: NO EXTENSION | ONE EXTENSION INDICATOR * | ONE EXTENSION RINGER | TWO EXTENSION RINGERS * |
| 2-WIRE | 65 | 45V. | 0 | 1000 | 200 | 600 | 200 |
| | 70 | 45V. | 0 | 1800 | 700 | 1200 | 700 |
| | 70 | 45V. | ±5 | 1300 | 300 | 800 | 400 |
| | 70 | 45V. | ±10 | 600 | | 300 | |
| | 75 | 45V. | 0 | 2600 | 1000 | 1700 | 1200 |
| | 75 | 45V. | ±5 | 2000 | 700 | 1300 | 800 |
| | 75 | 45V. | ±10 | 1600 | 400 | 800 | 500 |
| | 80 | 45V. | ±10 | 2400 | 800 | 1500 | 900 |
| 4-WIRE | 65 | 45V. | | 800 | 100 | 500 | 300 |
| | 70 | 45V. | | 1500 | 400 | 800 | 700 |
| | 75 | 45V. | | 2000 | 700 | 1500 | 1100 |

*The addition of an extension indicator or two extension ringers will reduce by one the number of lines which may be served by a given central office unit.

Working limits in TABLE A and TABLE B are based on the use of 13C or equivalent resistance lamp in series with the ringing supply. Loop resistances shown apply to the most distant indicator or ringer.

CIRCUIT NOTES:

| 101 | FEATURE OR OPTION | | PROVIDE FIG | PROVIDE APP'TR | QUANTITY |
|---|---|---|---|---|---|
| | VISUAL & AUDIBLE SIGNAL CKT | | 1 | | 1 PER STATION |
| | AUDIBLE ONLY SIGNAL CKT. | | 2 | | 1 PER STATION |
| | RINGING CUT-OFF KEY | | 3 | | 1 PER STATION |
| | RINGING CUT-OFF FEATURE | REQ. | | Y | |
| | | NOT REQ. | | X | |
| | CONTROL STATION DIAL | | 4 | | 1 PER CONTROL STATION |
| | CONNECTING CIRCUIT: DIAL PULSE RECIEVING & CODE DISTG. CKT. (2-WIRE OPERATION) | | | X | |
| | CONNECTING CIRCUIT: DIAL PULSE RECIEVING & CONTROL CKT. FOR MAX CAPACITY FIVE LINES (4-WIRE OPERATION) | | | W | |

| 102 | SIGNAL (VISUAL) | 2-WIRE OPERATION: RINGING SUPPLY | 2-WIRE OPERATION: RING G. ON | 4-WIRE OPERATION: ±-ON | 4-WIRE OPERATION: RING G. ON |
|---|---|---|---|---|---|
| | YELLOW | ± ON R | T | R | T, T1, R1 |
| | BLUE | ±-ON R | T | T, T1, R1 | R |
| | RED | ±-ON T | R | T | R, T1, R1 |
| | WHITE | ±-ON T | R | R, T1, R1 | T |

LEGEND

- 1-Way Sending Ckt. SD-95683-01
- 1-Way Receiving Ckt. SD-95683-01
- Receiving & Distributing Unit
- 2-Way Sig. Rept. Bal. Loop SD-95681-01
- 2-Way Sig. Rept. Open & Closed Loop SD-95682-01
- CX NET Net for CX Lines SD-95687-01
- Patching Jacks
- Bridging Jacks for Testing BL Stations
- BL Station
- Toll Facility
- Bridged Station - Max. one per line when voltage res. limits permit
- BS (Siren) Control

REFERENCE

SD-95684-01
SK-TR3849

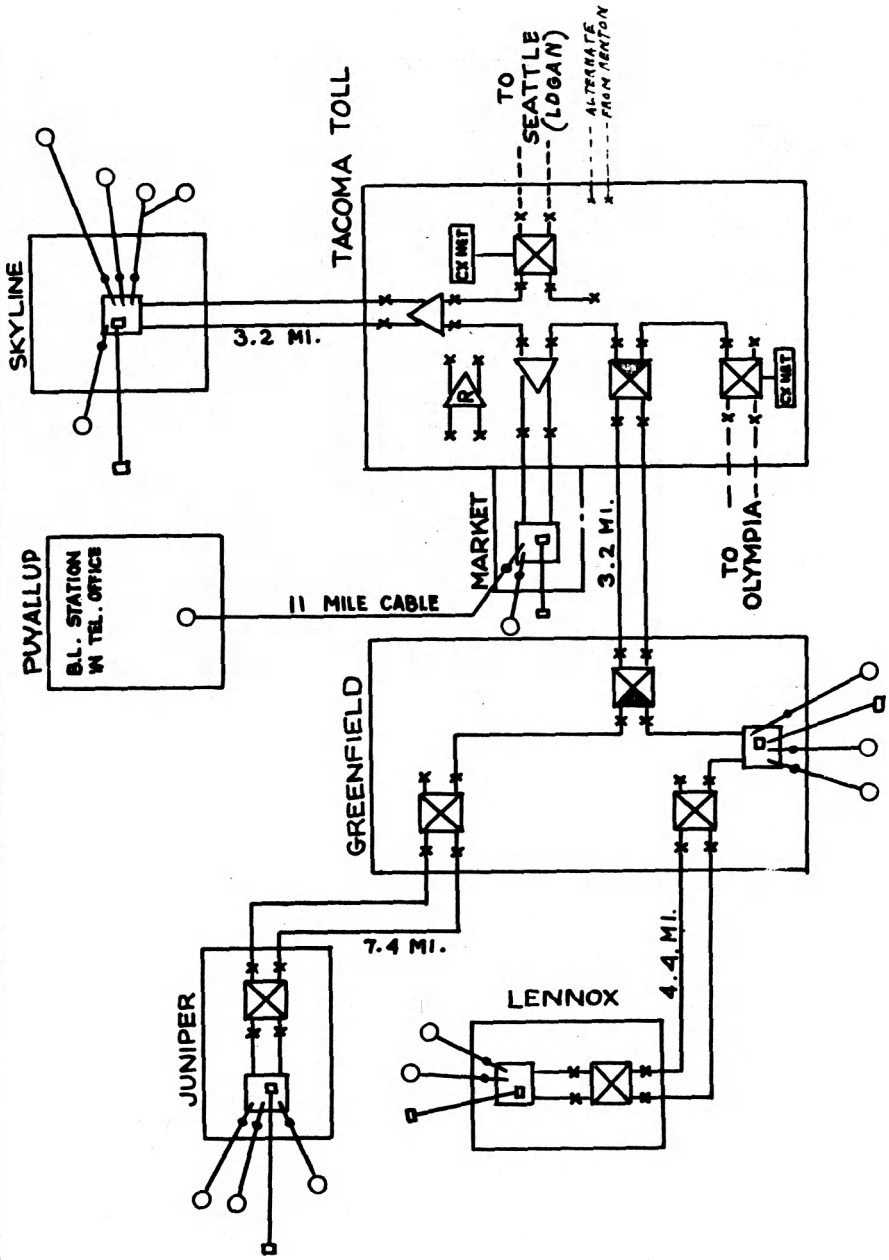


CADW SYSTEM
TYPICAL NETWORK
(TACOMA, WASHINGTON)

FILE
31.53
CIVIL DEF. 27 apr 71



SECTION A399.401
SECTION F23.916.10
SECTION M25.95.10

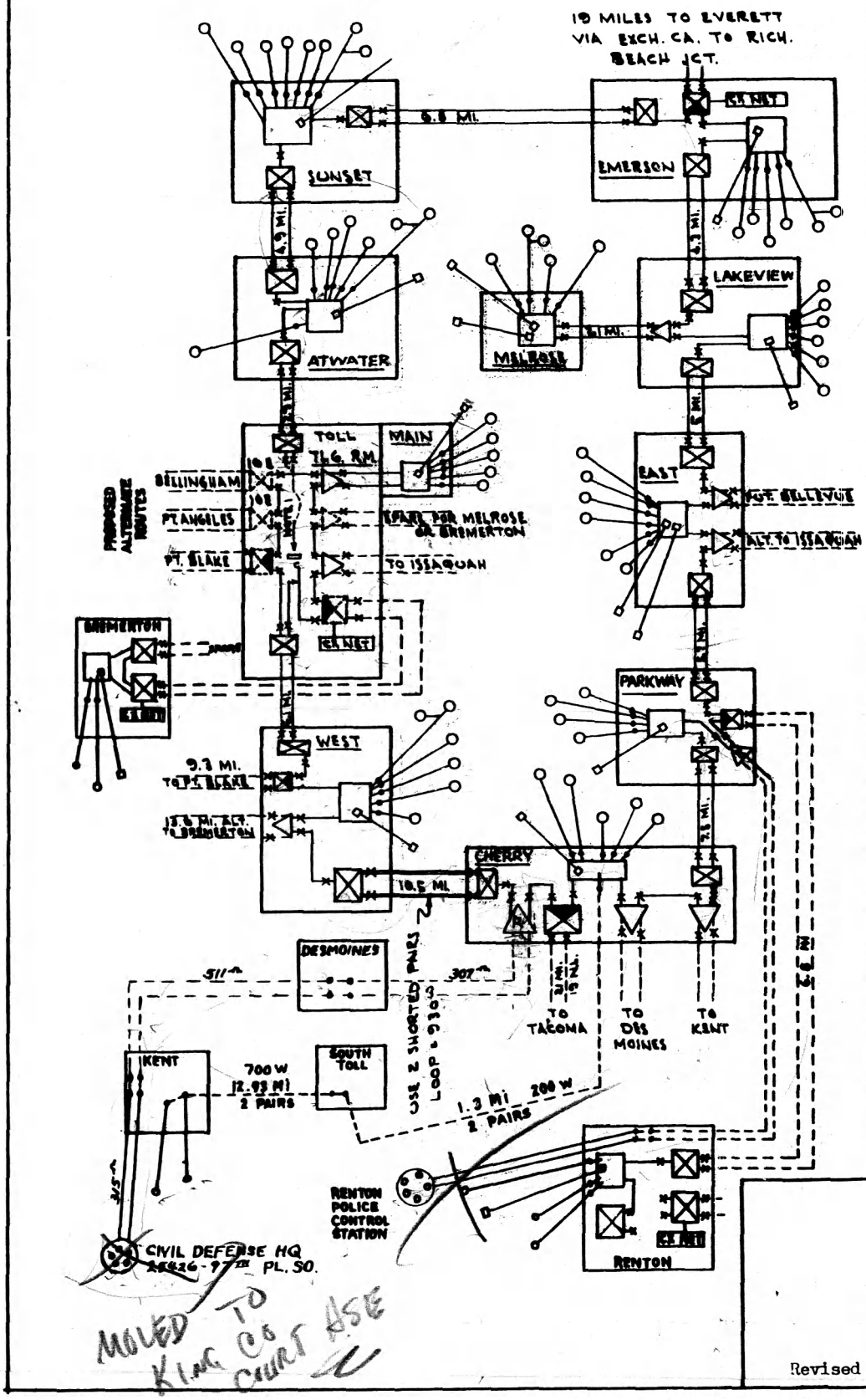


MOVED TO KING CO COURT HSE

LEGEND

- 1-Way Sending Ckt. SD-95683-01
- 1-Way Receiving Ckt. SD-95683-01
- Receiving & Distributing Unit
- 2-Way Sig. Rept. Bal. Loop SD-95681-01
- 2-Way Sig. Rept. Open & Closed Loop SD-95682-01
- CX NET Net for CX Lines SD-95687-01
- Patching Jacks
- Bridging Jacks for Testing BL Stations
- BL Station
- Toll Facility
- Bridged Station - Max. one per line when voltage res. limits permit
- BS (Siren) Control

NOTES

1. Atwater - toll leg terminated "stand by" to be patched in case continuity of regular Seattle network is disrupted.

CADW SYSTEM
TYPICAL NETWORK
(SEATTLE, WASHINGTON)

Revised October 1961

FORM GP-249 (Reduced)
CONTROL STATION, DIAL CODE PLATE

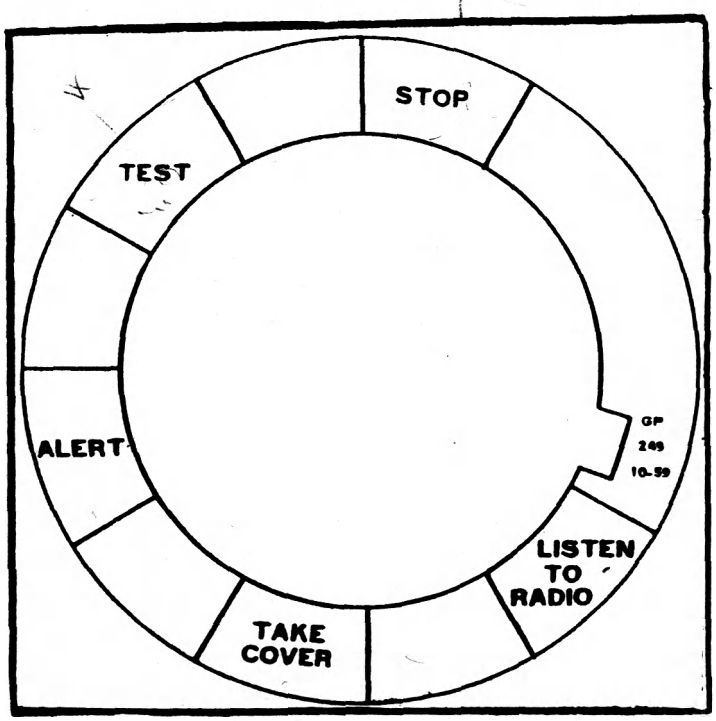


FORM GP-250 (Reduced)
CONTROL STATION, INSTRUCTION CARD

**BELL AND LIGHTS CONTROL STATION (DIAL)**

**DO NOT FORCE OR RETARD THE ROTATION OF THE DIAL**

**ACTUAL WARNING**

"2" ALERT WARNING

1. Dial "Alert" Twice (Sirens Sound Alert Signal)
2. Wait 3 Minutes, Then Dial "Stop" once..
   (After Step 1 and 2 wait 1 Minute then repeat)

"3" TAKE COVER

1. Dial "TAKE COVER" Twice (Sirens Sound Take Cover Signal)
2. Wait 3 Minutes, Then Dial "Stop" once.
   (After Step 1 and 2 wait 1 Minute then repeat)

"4" LISTEN TO RADIO

1. Dial "Listen to Radio" Twice (Sirens Do Not Sound)
2. Wait 1 minute, then dial "Stop" once.
3. Wait 30 Seconds,
4. Dial "Listen To Radio" Twice
5. Wait 1 Minute, then dial "Stop" once.

**TEST SIGNALS**

"1" TEST SIGNAL

A. Partial - Bell and Lights Station Only
Send This Test Every Day at 10:00 A.M.

1. Dial "Test" Twice
2. After 15 Seconds Dial "Stop" once.
   (Since Sirens Should Not Be Sounded, Never Dial Alert or Take Cover on this Test)

B. Siren Test - Send this Test Every Wednesday at 12:00 Noon

1. Dial "Alert" Twice
2. Wait 1 Minute then Dial "Stop" Once

If Wrong Phrase is Dialed on Either the First or Second Pull, If Finger Slips While Dialing, or If Lamp Indicator Does Not Respond to the Phrase Dialed, Immediately Dial "Stop" Once, Then Dial Correct Phrase, Twice.

If Degree of Warning is Changed While a Warning is Being Transmitted, Immediately Dial "Stop" Once, Then Dial New Phrase Twice and Follow Instructions for That Phrase.

KEEP COVER LOCKED. Key Should be Used to Open Cover and Must be Used to Lock Cover. However, If Key Is Not Readily Available, Cover Can be Forced Open by Hand. Do Not Attempt to Close Cover Without Using Key.

THIS IS STATION NO. _____ REPORT ANY SERVICE TROUBLE TO _____

The Pacific Tel. and Tel. Co.

Approved – State of Washington
Dept. of Civil Defense

GP 250 (10-59)

FORM GP-251
Receiving Station,
Number Strip (1-4)

| | | | |
|---|---|---|---|
| 1 | 2 | 3 | 4 |

GP 251 (10-59)

FORM GP-252
Receiving Station,
Code Designation Card

| | | | |
|---|---|---|---|
| TEST | ALERT | TAKE COVER | LISTEN TO RADIO |

GP252 10-59

FORM GP-253
RECEIVING STATION,
INSTRUCTION AND
NUMBER CARD

THIS IS CIVIL AIR RAID
WARNING STATION
No._____

FOR SERVICE ON THIS STATION
CALL_____

GP 253 (10-59)

2.08 Verify